Trio GENERATOR

MADE IN TURKEY

International Organization for Standardization ISO 14001:2015

ISO 9001

OUTPUT VALUES

Standby Power	Voltage	230/400
Standby Power	kVA	22
Standby Power	kW	17,8
Standby Power	Amper	32
Prime Power	Voltage	230/400
Prime Power	kVA	20

Prime Power	kW	16
Prime Power	Amper	29

DIESEL ENGINE

Brand	Ricardo
Model	4100 D
Max. Total Output Pow. (kWm/hp)	33/40
Cylinder Displacement (lt)	3,61
Cylinder Orientation	4 Single Line
Bore x Stroke(mm*mm)	90*100
Compression Ratio	18;1
Governor Type	Mechanic
Rotation	1500 RPM
Aspiration System	Natural
Injection	Direct
Cooling System	Water Cooled
Electrical System(V DC)	12
Oil Capacity (lt)	8
Engine Coolant Capacity (lt)	14
Fuel Cons. %50 (lt/h)	3,1
Fuel Cons. %75 (lt/h)	4,8
Fuel Cons. %100 (lt/h)	6,4

ALTERNATOR

Standby Power (kVa/kw)	25/20
Prime Power (kVa/kw)	23/18
Brand	TRIO
Output Voltage (V)	231/400
Frequency (Hz)	50
Stationary Vol. Regulation(±)	0,01
Short Circuit Current	%300 (10 sec)
Insulation	H
Protection	IP23
E ciency (%)	92
Overloading	110% for 1 hour
Power Factor (cos Q=0.8)	0,8
Tot. Harmonic Dist. Rate	<1 %
Connection Type	Star
Number of Pole	4
Number of Bearing	Single

DIMENSIONS & WEIGHT

Without Canopy	Width	1000 mm
Without Canopy	Length	1800 mm
Without Canopy	High	1500 mm
Without Canopy	Weight	500 kg
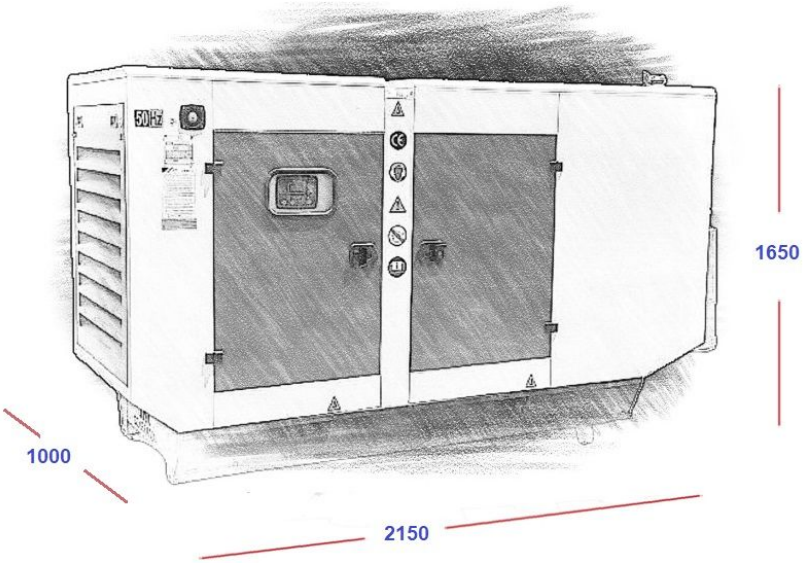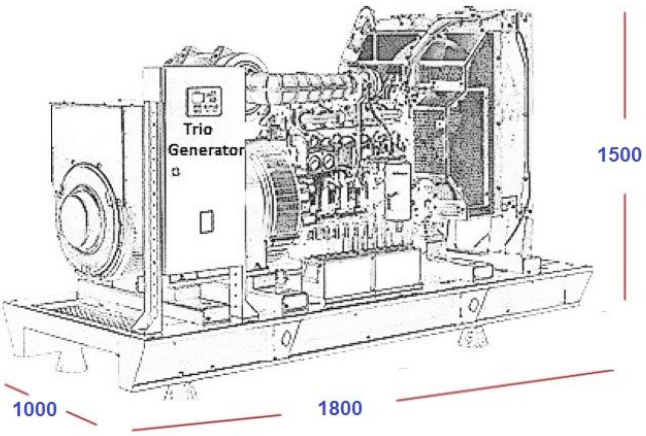
Without Canopy	Fuel Tank Capacity	180 lt
With Canopy	Width	1000 mm
With Canopy	Length	2150 mm
With Canopy	High	1650 mm
With Canopy	Weight	650 kg
With Canopy	Fuel Tank Capacity	180 lt